SPAWSYSTEM GNIEWCZYNA RAILWAY COMPONENTS Sp. z o.o.

COMPANY PRESENTATION

The company SPAWSYSTEM Gniewczyna Tomasz Dejnaka was established in 1998. Initially the core area of its activity was the production of stone processing machinery and equipment and spare parts for forestry machines. This enabled its gradual development and acquiring welding experience.

The next stage was the establishment of cooperation with a leading production plant in Poland, mainly in the area of making steel structures for its international customers. To ensure continuing progress and to meet the requirements of the competitive market SPAWSYSTEM Gniewczyna extended the range of its activity focusing on the production of parts and subassemblies for rail vehicles.

Thanks to the use of new technologies, high quality machines and equipment and raw materials from renowned suppliers we are able to provide our services for the deman-ding railway sector.

The potential of SPAWSYSTEM Gniewczyna is testified by its well-developed fleet of machinery and special-purpose equipment but also, and even most importantly, by its high-skilled personnel with long-term professional experience. The company allocates significant expenditure to staff training and plant certification. Currently SPAWSYSTEM Gniewczyna provides its services to ma-jor producers of rail vehicles, both Polish and international, in the passenger and freight transport sector.

Since August 2016, the company changet its legal form and operating under the name: SPAWSYSTEM GNIEWCZYNA RAILWAY COMPONENTS Sp. z o.o.

CERTIFICATES

QUALITY SYSTEM CERTIFICATION
DNV·GL
ISO 9001

Zertifizierter
GSI
SLV
Schweißfachbetrieb

DNV·GL

MANAGEMENT SYSTEM CERTIFICATE

Certificate No:
185956-2015-AQ-POL-RvA

Initial certification date:
03 November 2009

Valid:
31 October 2015 - 31 October 2018

This is to certify that the management system of

SPAWSYSTEM Gniewczyna Tomasz Dejnaka
ul. Gorliczyńska 98, 37-200 Przeworsk, Poland

has been found to conform to the Quality Management System standard:
ISO 9001:2008

This certificate is valid for the following scope:
Production of welded steel structures.
Production of parts and components of rail-vehicles.

Place and date:
Gdynia, 07 September 2015

MGMT. SYS.
RvA C 024

The RvA is a signatory to the IAF MLA

For the issuing office:
DNV GL – Business Assurance
ul. Łużycka 6e, 81-537 Gdynia, Poland

Włodzimierz Biel
Management Representative

Lack of fulfilment of conditions as set out in the Certification Agreement may render this Certificate invalid.
ACCREDITED UNIT: DNV GL Business Assurance B.V., ZWOLSEWEG 1, 2994 LB, BARENDRECHT, NETHERLANDS. TEL:+31102922689. assurance.dnvgl.com

GSI SLV
Hannover

Zertifikat

Dem Unternehmen

Spawsystem Gniewczyna Railway Components Sp.z o.o.

PL 37200 Przeworsk, ul.Gorliczynska 98

wird bescheinigt, dass es in dem gemäß Anlage angegebenen Umfang den Nachweis erbracht hat, die schweißtechnischen Qualitätsanforderungen nach

DIN EN ISO 3834-2

zu erfüllen.

Zertifikat-Nr.:	2017 700 0063/3834
Gültigkeitszeitraum:	vom 23.02.2017 bis 11.03.2020
Ausgestellt am:	09. März 2017

Der Auditor

Dipl.-Ing. Dräger

GSI mbH · SLV Hannover
GSI SLV
8
anerkannte Stelle

Zertifizierungsstelle
GSI - Gesellschaft für Schweißtechnik International mbH
Niederlassung SLV Hannover

Prof. Dr.-Ing. Kuscher

GSI – Gesellschaft für Schweißtechnik International mbH
Niederlassung SLV Hannover
Am Liniendeich Hafen 1, 30453 Hannover

DVS

0218

DVS ZERT

CERTIFICATE

Welding of railway vehicles and components
according to EN 15085-2

ZE-16083-01-00-EN15085-2017.0083.001

DVS ZERT hereby certifies that the company

Spawsystem Gniewczyna
Railway Components Sp.z.o.o.
ul. Gorliczynska 98
37-200 Przeworsk
POLAND

fulfills the requirements
for the scope according to

EN 15085-2 certification level CL1

in the range indicated on the reverse.

validity: 12.03.2017 until 11.03.2020

Düsseldorf, 11.03.2017
Place and date of issue

Dipl.-Ing. Dräger
Lead Assessor

Dipl.-Ing. Gurschke
head of certification body

DAkkS

CERTIFICATE

Conformity of the Factory Production Control

2451-CPR-EN1090-2015.0023.002

In compliance with Regulation 305/2011/EU of the European Parliament and of the Council of 9 March 2011 (the Construction Products Regulation or CPR), this certificate applies to the following construction product:

Construction product	**Structural components and kits for steel structures to EXC3 according to EN 1090-2**
Intended use	for load-bearing structures in all types of buildings
CE - marking method	ZA.3.2 and ZA.3.4 acc. to EN 1090-1:2009+A1:2011
	produced by or for
Manufacturer	**Spawsystem Gniewczyna Railway Components Sp.z.o.o.** **ul. Gorliczynska 98** **37-200 Przeworsk** **POLAND**
Manufacturing plant Production facility of the manufacturer	Spawsystem Gniewczyna Railway Components Sp.z.o.o. ul. Gorliczynska 98 37-200 Przeworsk POLAND
Confirmation	This certificate attests that all provisions concerning the assessment and verification of constancy of performance described in Annex ZA of the harmonised standard **EN 1090-1:2009+A1:2011** under system 2+ are applied, and that the factory production control fulfills all the prescribed requirements stated therein.
Start of validity Date of issue	17.10.2012
Next Surveillance audit	16.10.2019
Period of validity	This certificate will remain valid as long as the test methods and/or the factory production control requirements included in the harmonised standard used to assess the performance of the declared characteristics do not change, and the product and the manufacturing conditions in the plant are not modified significantly.
Remarks	see reverse
Place and date of issue	Düsseldorf, 29.09.2016 Wolanski

Dipl.-Ing. Gurschke
Head of certification body

CERTIFICATE

Conformity of the Factory Production Control

2451-CPR-EN1090-2015.0039.002

In compliance with Regulation 305/2011/EU of the European Parliament and of the Council of 9 March 2011 (the Construction Products Regulation or CPR), this certificate applies to the following construction product:

Construction product	**Structural components and kits for aluminum structures to EXC3 according to EN 1090-3**
Intended use	for load-bearing structures in all types of buildings
CE - marking method	ZA.3.2 and ZA.3.4 acc. to EN 1090-1:2009+A1:2011
	produced by or for
Manufacturer	**Spawsystem Gniewczyna Railway Components Sp.z.o.o.** **ul. Gorliczynska 98** **37-200 Przeworsk** **POLAND**
Manufacturing plant Production facility of the manufacturer	Spawsystem Gniewczyna Railway Components Sp.z.o.o. ul. Gorliczynska 98 37-200 Przeworsk POLAND
Confirmation	This certificate attests that all provisions concerning the assessment and verification of constancy of performance described in Annex ZA of the harmonised standard **EN 1090-1:2009+A1:2011** under system 2+ are applied, and that the factory production control fulfills all the prescribed requirements stated therein.
Start of validity Date of issue	28.06.2013
Next Surveillance audit	16.10.2019
Period of validity	This certificate will remain valid as long as the test methods and/or the factory production control requirements included in the harmonised standard used to assess the performance of the declared characteristics do not change, and the product and the manufacturing conditions in the plant are not modified significantly.
Remarks	see reverse
Place and date of issue	Düsseldorf, 29.09.2016 Wolanski

Dipl.-Ing. Gurschke
Head of certification body

MACHINERY

TURNING CENTER MAZAK

PRESS BRAKE BEYELER

TURNING-MILLING CENTER HYUNDAI-KIA

VERTICAL MILLING CENTER CINCINATI MILACRON

TURNING CENTER DOSSAN

TURNING CENTER PUMA 350 PM

VERTICAL MILLING CENTER DOSSAN DNM 650

LASER CUTING MACHINE MAZAK OPTIFLEX 3015 Fiber II

PRESS BRAKE BYSTRONIC Xpert 150

MAZAK SR-800 SR 5-Axis Machining Centre

HORIZONTAL MILLING AND BORING CENTER WHQ 105 CNC

PLATE-BEVELING MACHINE MMB 400

SHOT-BLASTING MACHINE

SIX AXIS LASER CUTING MACHINE 3D MAZAK SPACE GEAR 510 MkII

SCISSORS WELDING TABLES

QUALITY CONTROL

VT-2

MT-2

PT-2

UT-2

RT-2

WELDING EQUIPMENT

PRODUCTS


KEMPPI
KEMPPI

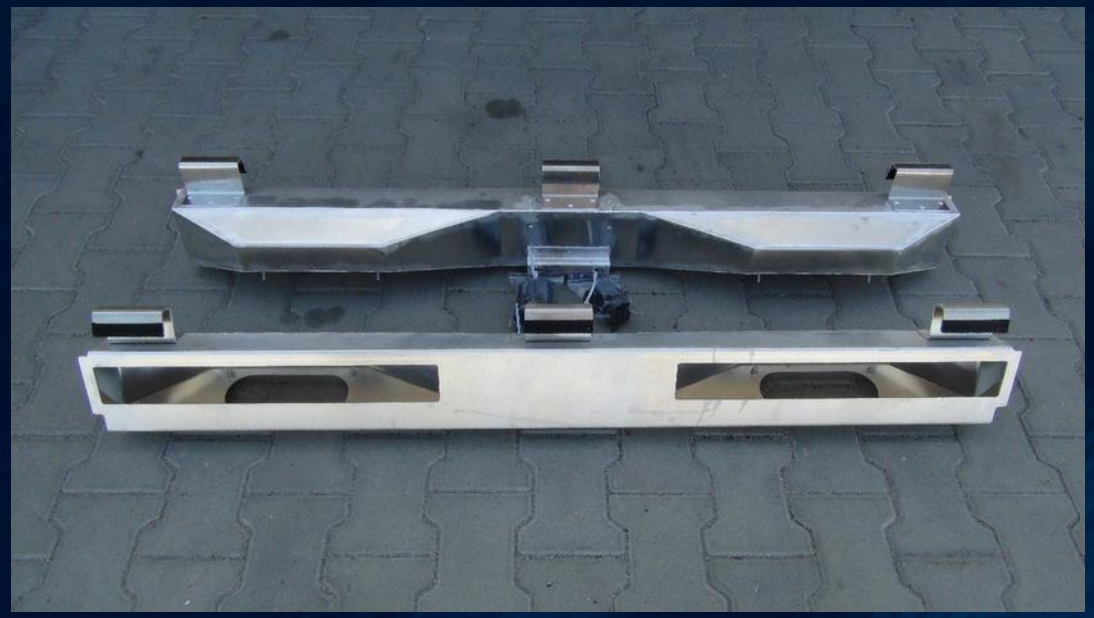

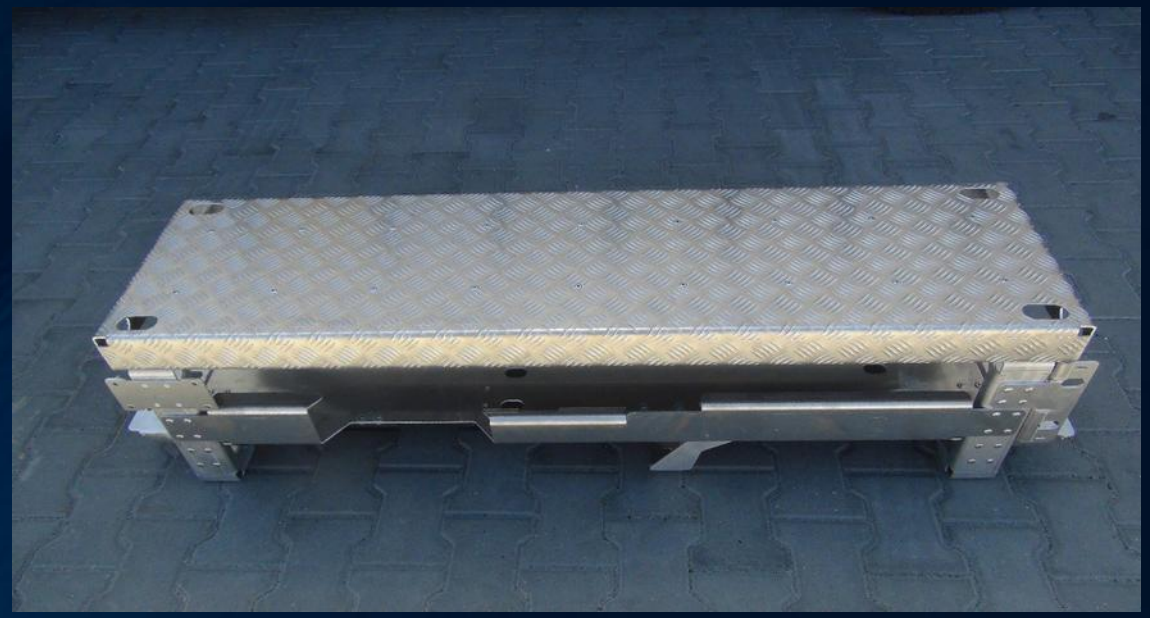

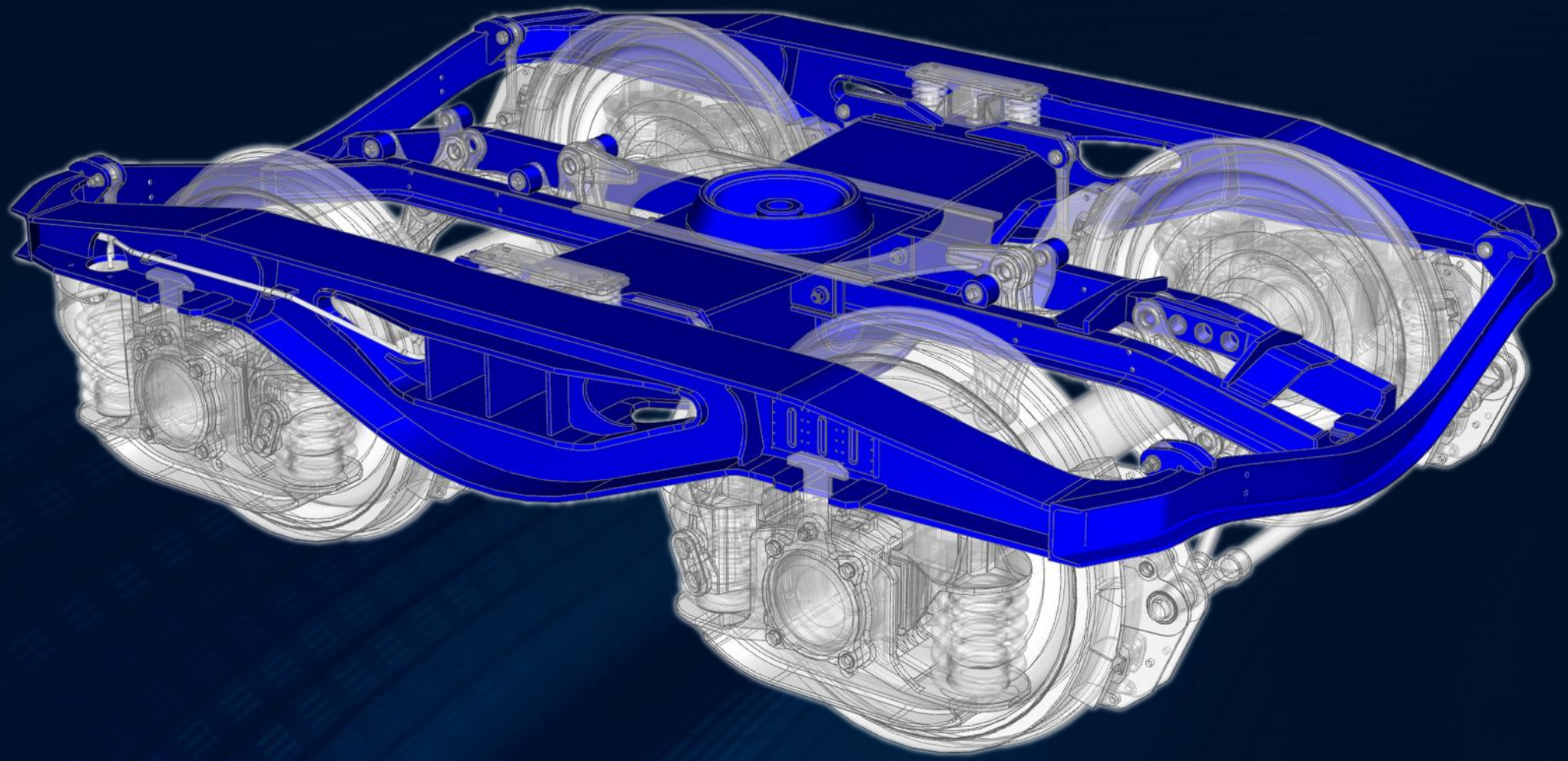

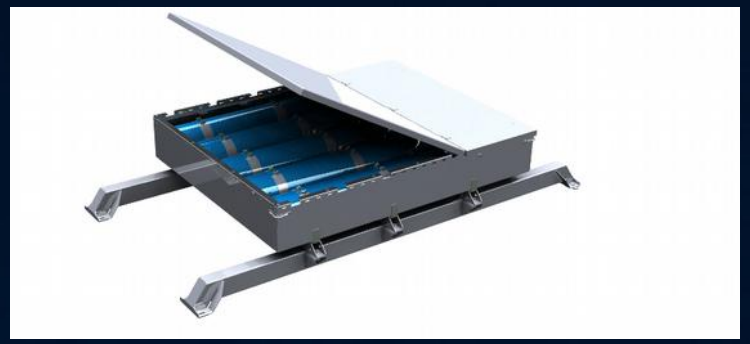

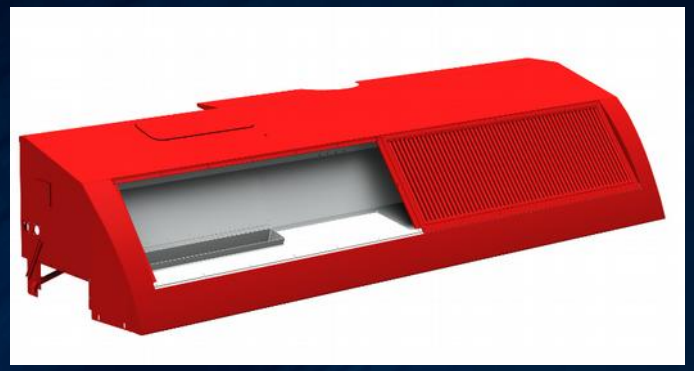

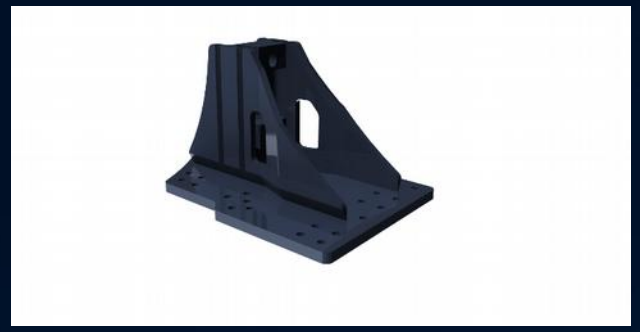

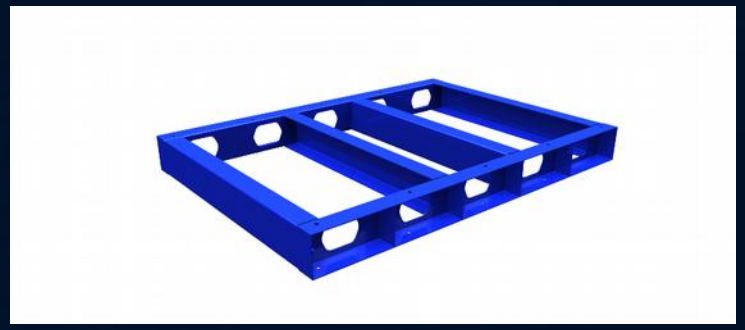

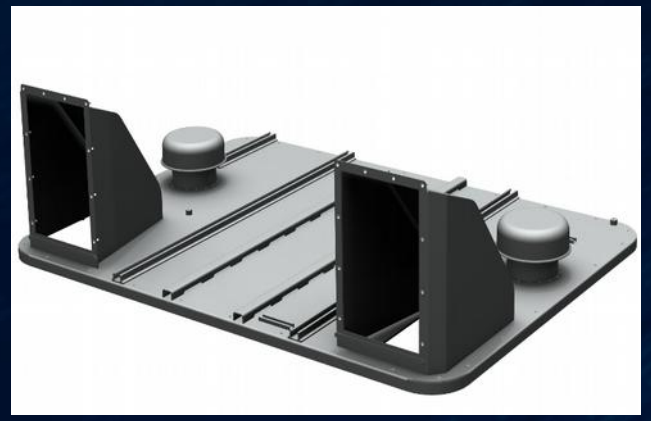

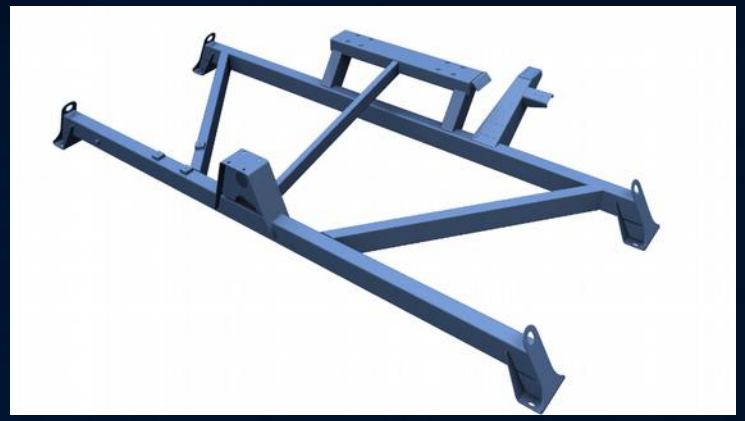

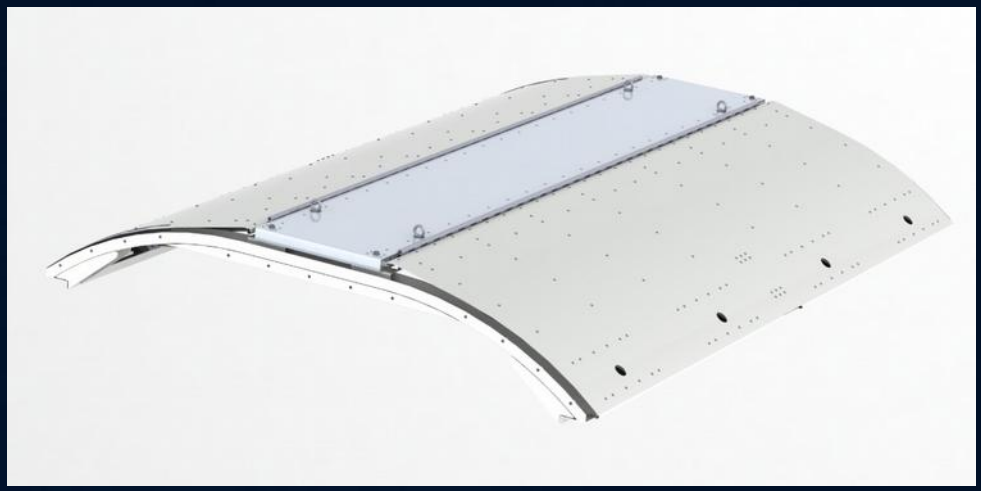

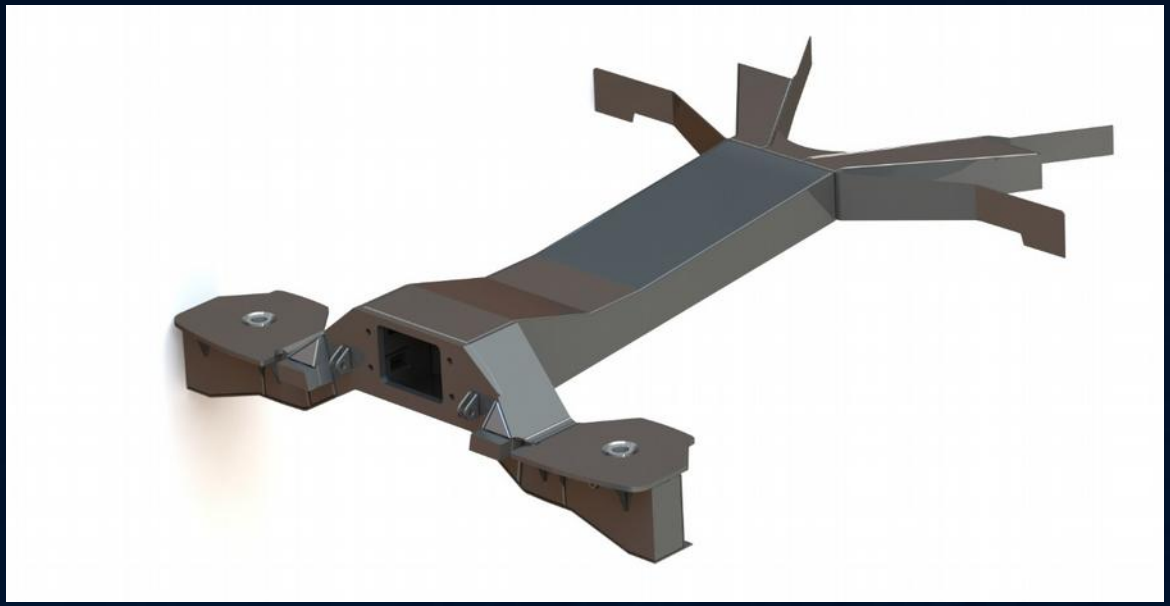

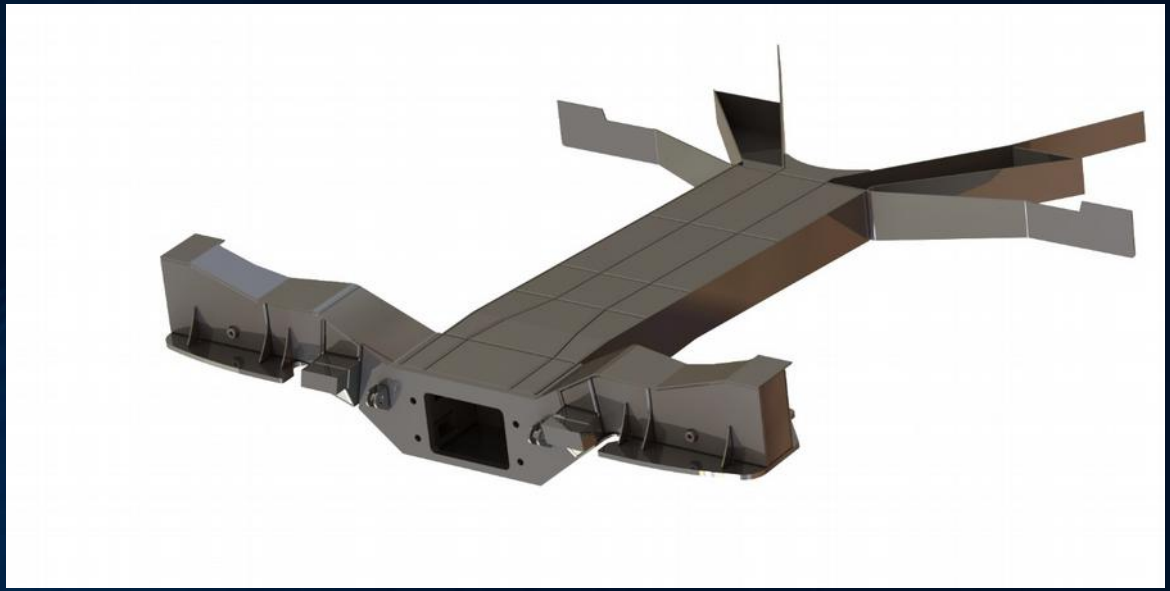

www.spawsystem.pl